ACTIVATEDDECOR

**Toll Free: 1-877-543-8711**

**www.activateddecor.com**

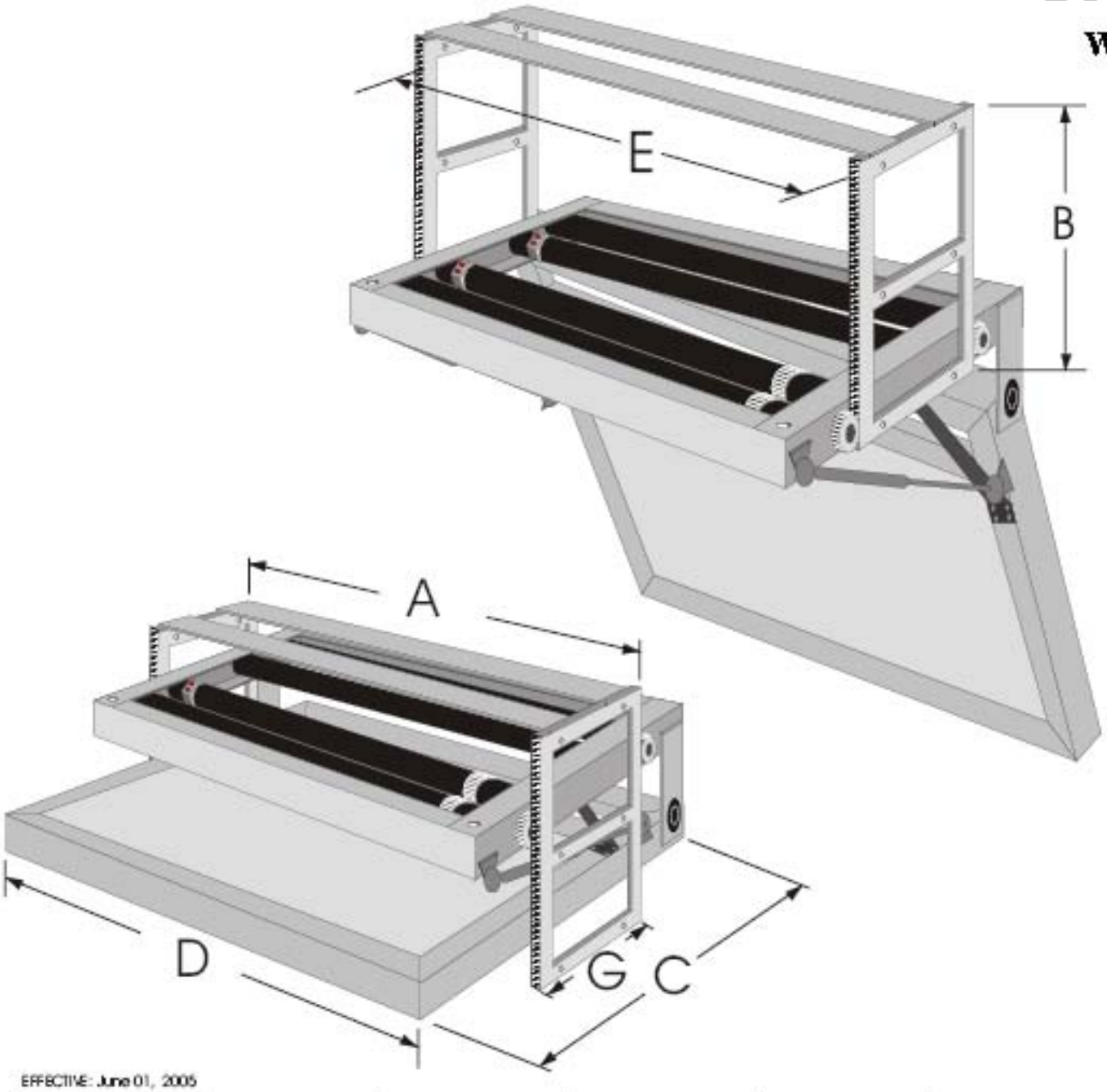


TELE-LIFT

- *Optional Controllers for this Model:*
  - *Radio Remote*
  - *Infrared Remote*
  - *Low Voltage/Dry Contact Control*
  - *Momentary Rocker Switch*
  - *Maintain Rocker Switch*
  - *Current Sensor*

EFFECTIVE: June 01, 2005

| Model | A | B | C | D | E | G | Lowers | Tilts | Max Load |
|---|---|---|---|---|---|---|---|---|---|
| **1042-CD** | 42 | 11.5 | 36 | 39.25 | 40.5 | 9.125 | 7 | 95° | 100 Lbs |
| **1048-CD** | 48 | 11.5 | 39 | 45.25 | 46.5 | 9.125 | 7 | 95° | 100 Lbs |
| **1056-CD** | 56 | 11.5 | 44 | 53.25 | 54.5 | 9.125 | 7 | 95° | 150 Lbs |
| **1066-CD** | 66 | 11.5 | 50 | 63.25 | 64.5 | 9.125 | 7 | 95 | 200 Lbs |
| | | | | | | | | | |